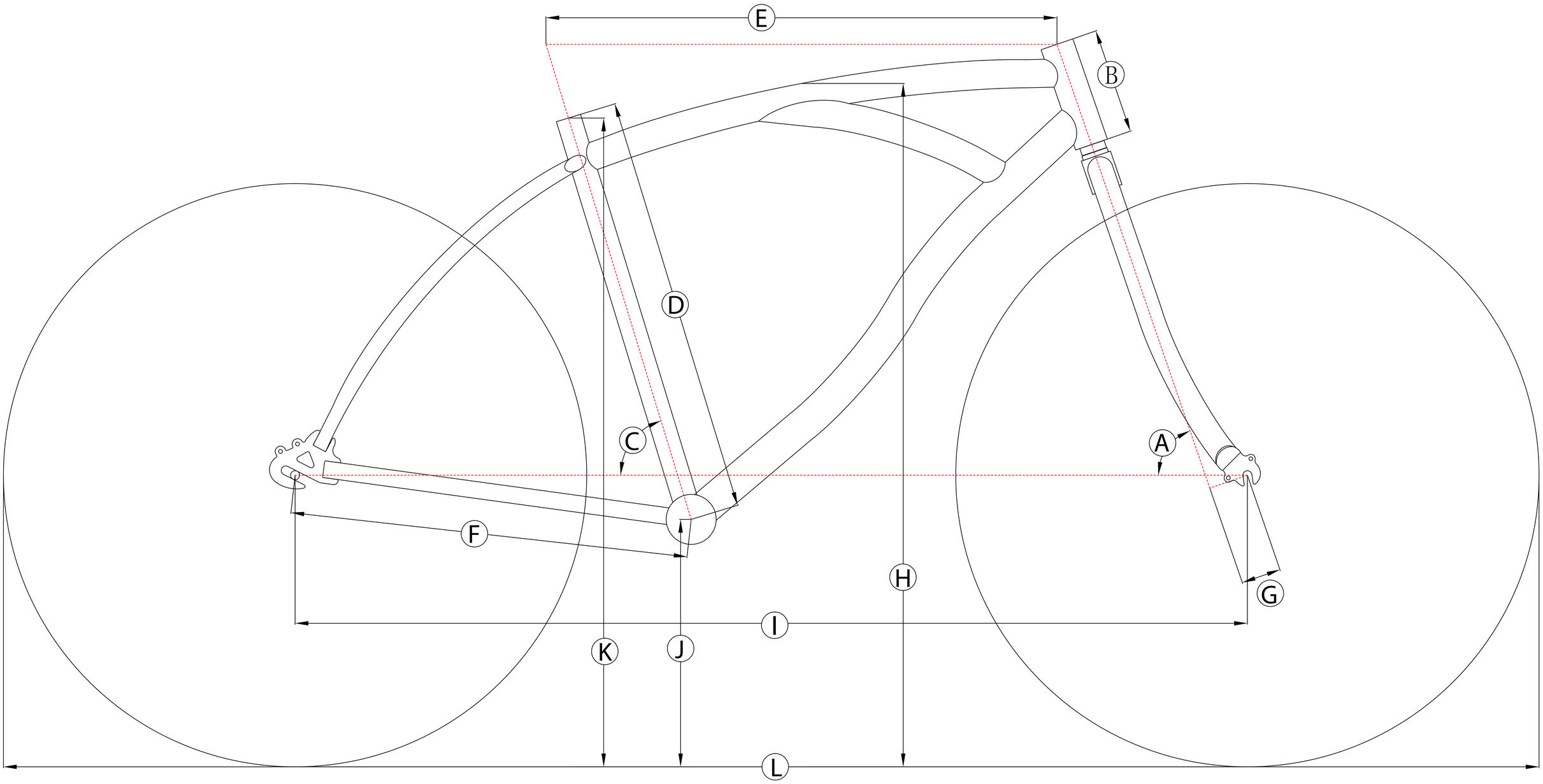


Atlas

| Frame Size | | Men 18.5 inch | | |
|---|---|---|---|---|
| | | cm | in. | mm |
| A | Head Tube Angle | 71 Deg. | 71 Deg. | 71 Deg. |
| B | Head Tube | 12 | 4.7 | 120 |
| C | Seat Tube Angle | 73 Deg. | 73 Deg. | 73Deg. |
| D | Seat Tube | 47.5 | 18.7 | 475 |
| E | Top Tube (Effective) | 57.8 | 22.8 | 578 |
| F | Chain Stay | 45.1 | 17.8 | 451 |
| G | Fork Offset | 4.5 | 1.8 | 45 |
| H | Standover | 77.3 | 30.4 | 773 |
| I | Wheelbase | 107.5 | 42.3 | 1075 |
| J | BB | 28 | 11 | 280 |
| K | Seat Tube to Ground | 73.4 | 28.9 | 734 |
| L | Overall length | 173.8 | 68.4 | 1738 |